A World Leading SFI Research Centre

CONNECT Centre for Future Networks

Trinity College Dublin The University of Dublin

University of BRISTOL

UFES

Science Foundation Ireland sfi For what's next

Coordinated fibre and wireless spectrum allocation in SDN-controlled wireless-optical-cloud converged architecture

Frank Slyne[(1)], Rafael S. Guimaraes[(2)(3)], Yi Zhang[(1)],
Magnos Martinello[(3)], Reza Nejabati[(2)], Marco Ruffini[(1)] and Luiz A. DaSilva[(1)]

[(1)]CONNECT Centre, Trinity College Dublin. [(2)]University of Bristol. [(3)]Federal University of Espirito Santo

ABSTRACT: We provide an experimental demonstration of LTE multi-cell resource allocation in a converged LTE-over-PON architecture. Our SDN controller dynamically adjusts the wireless bandwidth of each cell, according to their demand, jointly with their fronthaul rate and reserved PON capacity.

Demonstration

- We demonstrate spectrum reuse across multiple adjacent cells and Variable-rate fronthaul with capacity allocation to small cells, enabled by Software Defined Network (SDN) and statistical Time Division Multiplexing (TDM).
- We demonstrate a scenario where two mobile users UE1 and UE2, are served respectively by content providers A and B. UE1 and UE2 are in adjacent cells and are allocated bandwidth depending on their demand. The cells use a PON as common front-haul.

Novelty

- eNodeBs are modified to allow dynamic reconfiguration of the number of Physical Resource Blocks (PRBs) of both Physical Downstream Shared Channel (PDSCH) channels. This affects the bandwidth, sampling rate, FFT size and other signal processing blocks.
- Integration of control plane for Core (ABNO) located at University of Bristol and control plane for PON and LTE located at Trinity College Dublin.

Physical Implementation

- ABNO (application-based network operations), located at UnivBris side, orchestrates the provision of the optical-packet path, and computing resources, across a meshed optical and OpenFlow network located at UnivBris and a wireless optical (PON) network at TCD.
- The optical wireless SDN controller at TCD coordinates the capacity adaptation between the BBU, the RRH, and the PON and spectrum reuse across multiple adjacent cells

Topology

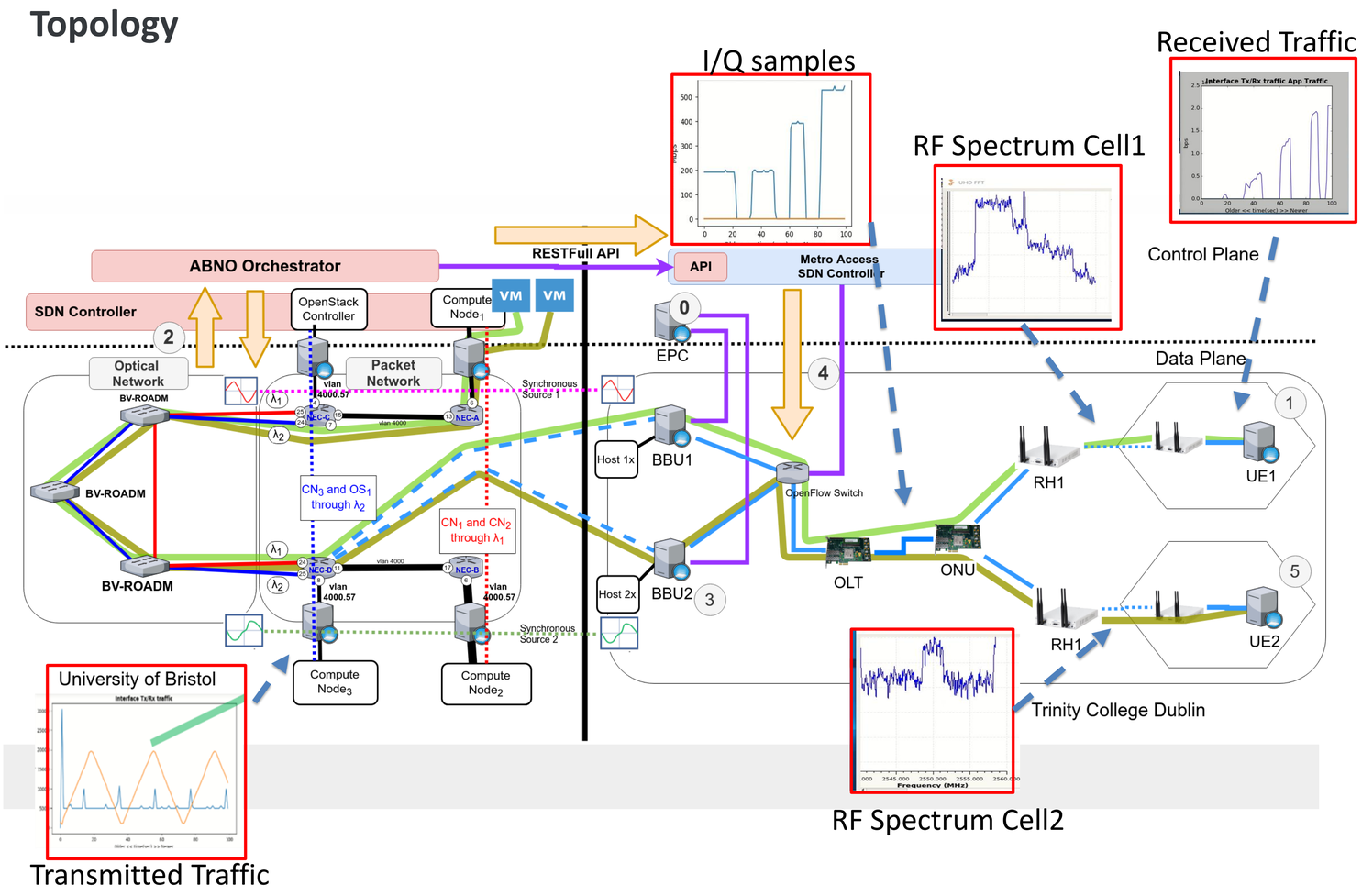

Results

Map of Fronthaul Rate to Cell Capacity

	Cell 1			Cell 2		
QoS Level	Bandwidth MHz	Fronthaul Rate Mbps	Max Cell Capacity Mbps	Bandwidth MHz	Fronthaul Rate Mbps	Max Cell Capacity Mbps
1	3	121	1.97	15	488	21.8
2	5	184	15.4	10	368	19.5
3	10	368	19.5	5	184	15.4
4	15	488	21.8	3	121	1.97

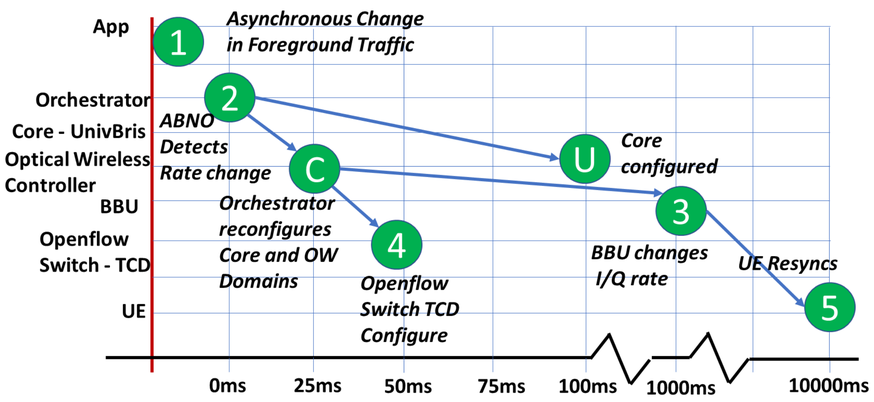

Key to events

Event-1 **(E-1)**: user UE1 starts a high-QoS service
E-2: the orchestrator (UnivBris), detects capacity increase
E-C: the orchestrator instructs the Optical Wireless Controller (TCD) to increases the PON and mobile capacity through the Restful API.
E-3: the TCD controller instructs BBU to change PRBs
E-4: TCD controller reconfigures the OpenFlow switch to assure higher capacity to BBU-1
E-U: the orchestrator is configured within 100ms
E-5: after the increase in BBU-1 spectrum, the UE synchronises to new sampling rate and FFT size

Realtime Operational Display

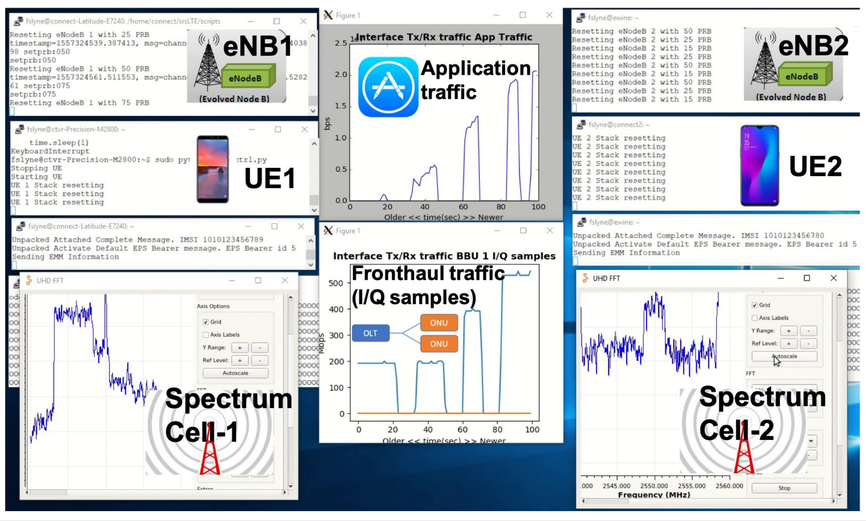

Relevance to Fibre Optic Communications

- Promotes the application of Passive Optical Network as a bearer for LTE services. PON utilisation is optimised. Granular LTE service, using variable rate fronthaul, is provided where dedicated (PtP) infrastructure is not feasible.
- Highly relevant to stakeholders (vendors, operators and service providers) interested in developing the next generation of access network infrastructure in support of 5G.

FUTEBOL Federated Union of Telecommunications Research Facilities for an EU-Brazil Open Laboratory

SHARE

Orca Orchestration and Reconfiguration Control Architecture

Ireland's European Structural and Investment Funds Programmes 2014-2020
Co-funded by the Irish Government and the European Union

European Union European Regional Development Fund

Science Foundation Ireland sfi For what's next